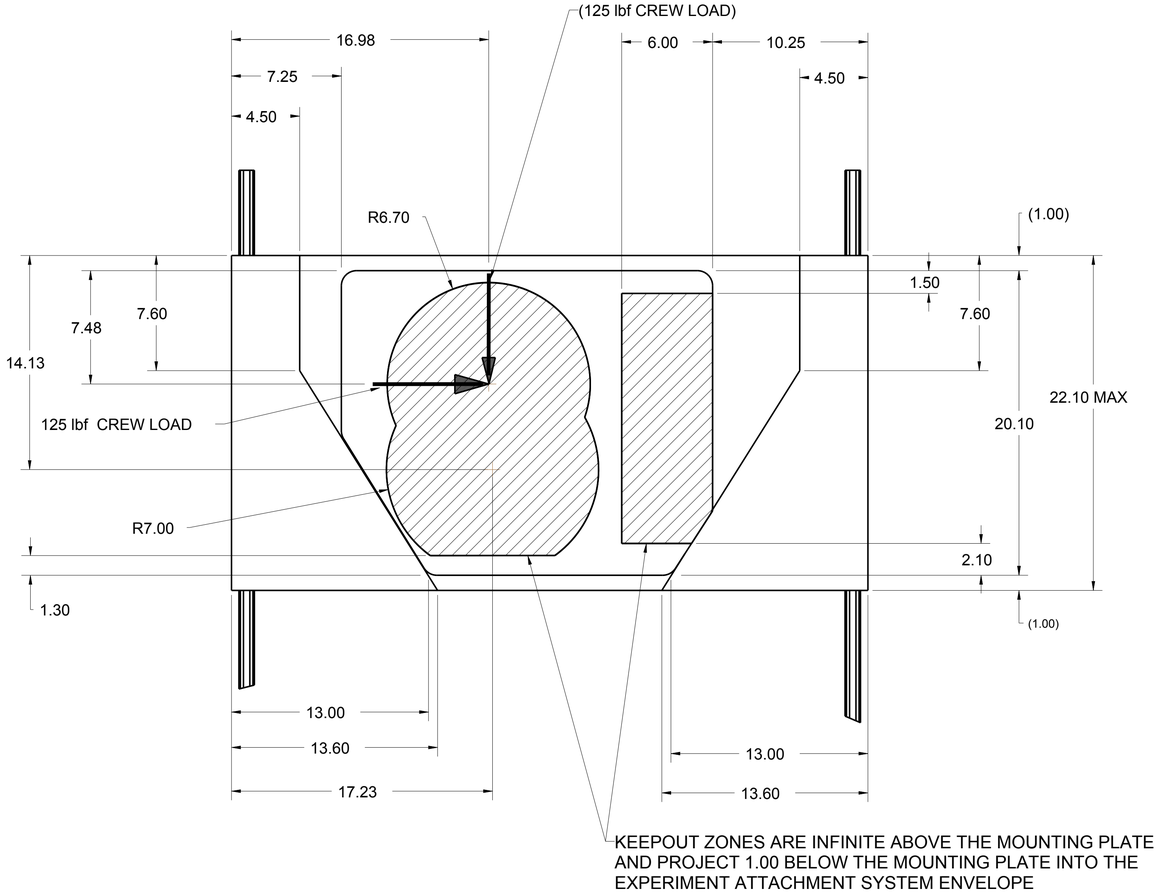

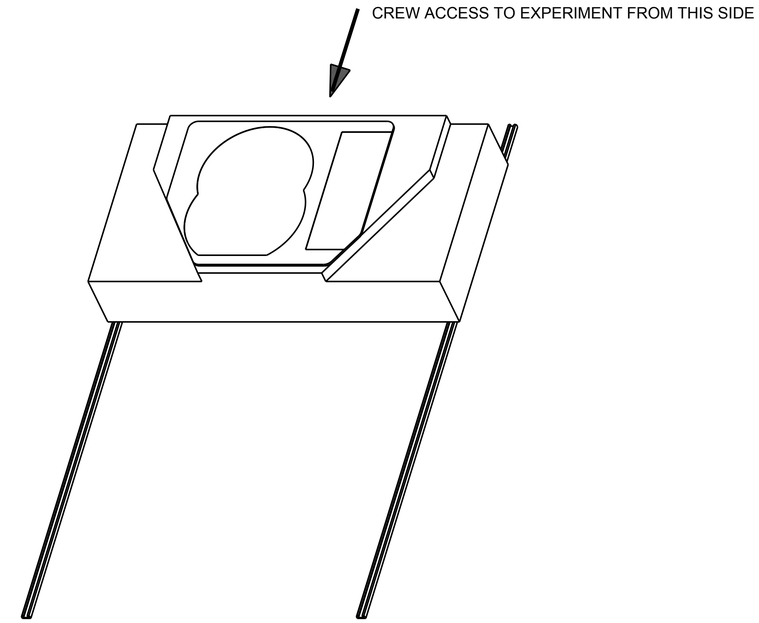

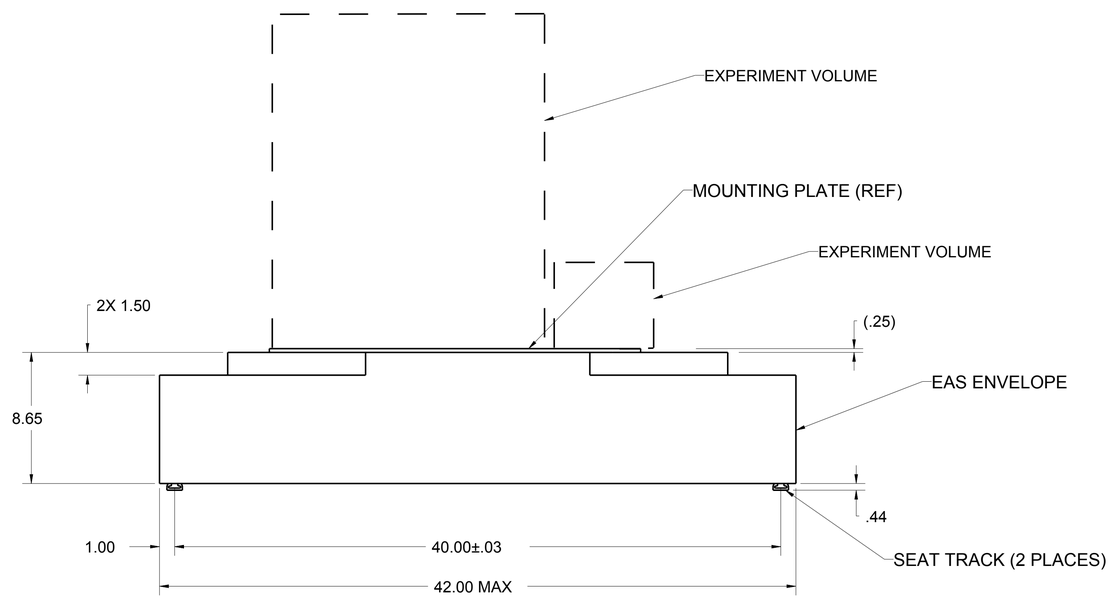

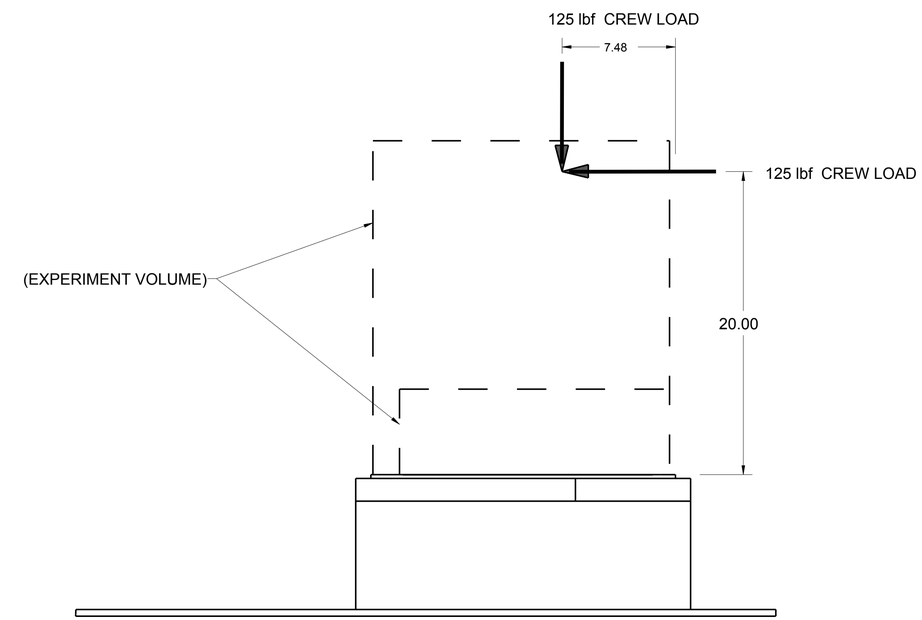

EXPERIMENT ATTACH SYSTEM (EAS) ENVELOPE

DATE: 02/24/2016 REVISION: NC